Item	Part name	Q'ty/Ea'	Material	Finish
1	HSG	1	High temp.Plastic UL94 V-0 Color Black	————
2	Body	6	Leaded Brass	Gold plating over Nickel plating
3	Plunger	6	Leaded Brass	Gold plating over Nickel plating
4	Spring	6	Stainless steel wire	————
5				

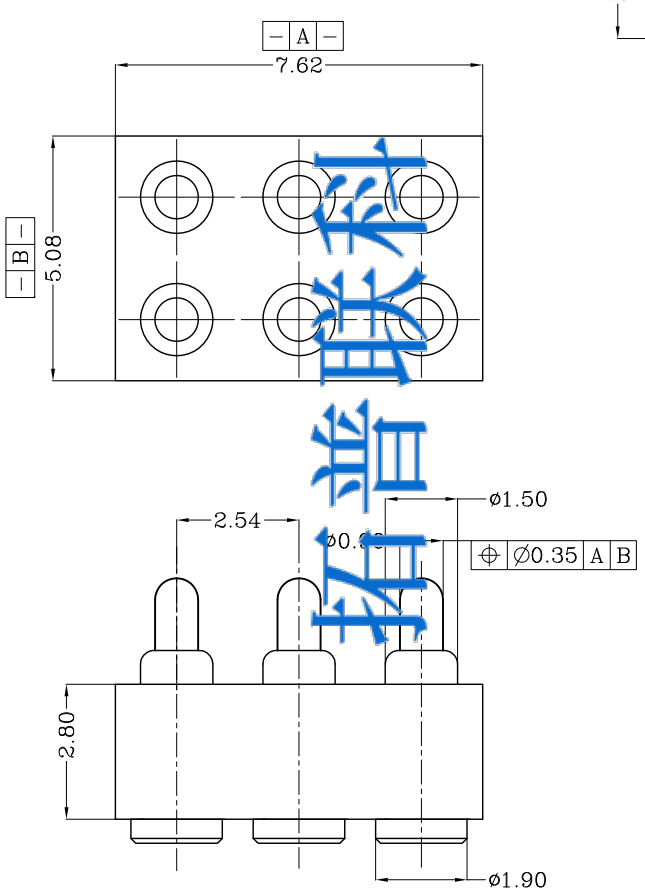

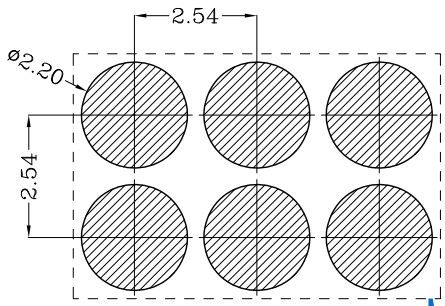

Recommended PCB Layout

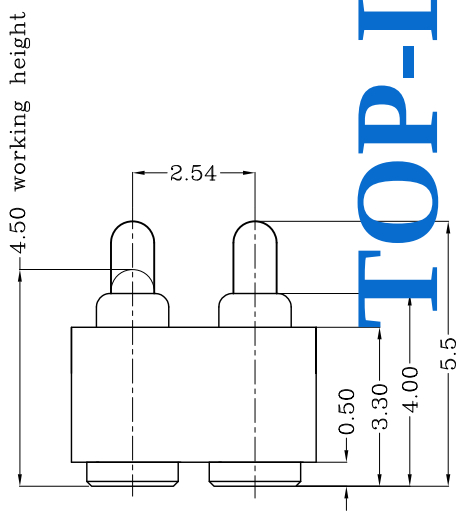

Table 1 Mechanical performance		
working height	4.50mm	110±20gf <2.1>
Durability	10000cycle	

Notes:
1 Demensions shall be interpreted per ASME Y14.5M.
2 Mechanical performance(See the table 1)
<2.1>The force is the average of forces obtained when plunger goes downwards and upwards.
3 Electrical performance
Resistance: 50mOhm Max.Current rating: 2.0A
4 RoHS complaint.

拓普联科 TOP-LINK

THIS INFORMATION IS CONFIDENTIAL AND IS DISCLOSED TO YOU ON CONDITION THAT NO FURTHER DISCLOSURE IS MADE BY YOU TO OTHER THAN TOP-LINK PERSONNEL WITHOUT WRITTEN AUTHORIZATION FROM TOP-LINK LTD.

DWN No.: C-110738

	update	2012/11/30
	NEW	2011/09/14
Rev.	Revision record.	Date.

DIST ———
DIST ———

Top-Link Electronics Ltd.

TOLERANCES UNLESS OTHER SPECIFIED
0. = ± –
0.0 = ± 0.15
0.00 = ± 0.10
0.000= ± –
Angle: ±1°
SURF TEXTURE: REMOVE BURRS. BREAK SHARP EDGES R0.05 MAX.DO NOT SCALE PRINT.

Type: Customer drawing	Unit: mm	Weight	
DWN: Qin Zuozhong	APVD:	top-Link Electronics	Top-Link Electronics Ltd.
CHK:	REL:		
Name: Customer drawing			
Scale: 1:1	Size: A4	DWG No.: C-110738	Page: 1/1	Rev.: 2

110738-6
PART NUMBER